Aero **40FP**

OPERATOR MANUAL

Cold Jet®

Original Instructions

OM.A40FP.20150701

Printed in the U.S.A

Due to continued product development this information may change without notice. The information and intellectual property contained herein is confidential between Cold Jet and the client and remains the exclusive property of Cold Jet. If you find any problems in the documentation, please report them to us in writing. Cold Jet does not warrant that this document is error-free.

This manual reflects the product configuration as was current at the time of initial production. An item's display in this manual does not guarantee the item's availability at any time in the future. Images shown are for representative purposes only. Products may vary from the images displayed. Cold Jet is not liable for typographical errors or changes to specifications presented.

EC Declaration of Conformity

We as the manufacturer:

Cold Jet, LLC

455 Wards Corner Road

Loveland, OH 45140 US

+1 513 831 3211 / +1 513 831 1209

declares that the following product:

Product Designation: Aero 40FP Model no.: 2A0290 Voltage: 120/230 VOLTS AC

complies with all relevant requirements of the directives listed below:

Directive 2006/42/EC [Machinery Directive]
Directive 2004/108/EC [EMC Directive]

References to the harmonized standards used:

EN ISO 12100:2010	EN ISO 4414:2010	EN ISO 13857:2008
EN 953:1997+A1:2009	EN ISO 13732-3:2008	EN 60204-1:2006/AC:2010
EN 1088:1995+A2:2008	EN ISO 13849-1:2008/AC:2009	

Person in the European Community authorized to compile the technical documentation:

Cold Jet Europe bvba, Mr. Wim Eeckelaers, Zone 1 Researchpark 330 B-1731 Zellik, Belgium

Place and Date of Issue: Loveland, OH

Michael E. Rivir
V.P.-Engineering,Cold Jet, LLC.

_____

WHAT IS DRY ICE CLEANING?

Dry ice cleaning is similar to sand blasting, plastic bead blasting or soda blasting where a medium is accelerated in a pressurized air stream to impact a surface to be cleaned or prepared.

However, instead of using hard abrasive media to grind on a surface (and damage it), dry ice cleaning uses soft dry ice accelerated at supersonic speeds to impact the surface and lift the undesirable item off the underlying substrate.

DRY ICE CLEANING:

- **is a non-abrasive, nonflammable and non-conductive cleaning method**
- **is environmentally-responsible and contains no secondary contaminants such as solvents or grit media**
- **is clean and approved for use in the food industry**
- **allows most items to be cleaned in place without time-consuming disassembly**
- **can be used without damaging active electrical or mechanical parts or creating fire hazards**
- **can be used to remove production residues, release agents, contaminants, paints, oils and biofilms**
- **can be as gentle as dusting smoke damage from books or as aggressive as removing weld slag from tooling**
- **can be used for many general cleaning applications**

Cold Jet dry ice cleaning uses compressed air to accelerate frozen carbon dioxide (CO_2) “dry ice” pellets to a high velocity. Dry ice pellets can be made on-site or supplied. Pellets are made from food grade carbon dioxide that has been specifically approved by the FDA, the EPA and the USDA.

Carbon dioxide is a non-poisonous, liquefied gas, which is both inexpensive and easily stored at work sites.

Aero **40FP**

SAFETY GUIDELINES

The Aero 40FP is safe and easy to operate; however, certain precautions must be followed during its use. To understand all the necessary precautions, you must read the entire Aero 40FP manual before operating the unit.

⚠ The Aero 40FP should only be operated by authorized and trained personnel.

IN THIS SECTION

GENERAL SAFETY REQUIREMENTS

- Always follow the guidelines of the governing codes of your local/national body as a minimum standard for ensuring safety.
- Always wear thermal gloves, eye and ear protection (safety glasses and ear plugs).
- Never expose bare skin to CO_2 ice.
- Never point the nozzle at self or anyone else and always exercise extreme caution when people are in the blast area.
- Never use a wire tie to hold the applicator trigger in the on position. This will cause damage that will void the warranty.
- Never use the blasting unit or hoses for anything other than the intended use.
- Never operate in a confined space without an approved ventilation system.
- Never operate the unit with guards removed.
- Never mask the machine's ventilation holes.
- Never operate a damaged blasting unit.
- Never exceed recommended hose or blasting unit pressure levels.
- Do not kink the blast hose before, during or after operation.
- Never disconnect the air supply hose without first shutting off the source air and removing the line pressure.
- Only Cold Jet trained service technicians are certified to work on electrical components.

OM.A40FP.20150701

- Do not operate equipment with electrical parts exposed, jumpered or rendered inoperable.
- Only use dry ice pellets as the cleaning media.
- Always engage applicator safety switch before laying it down or passing it to someone.
- Always turn the main power off and remove the applicator control cable before removing the blast hose.
- Always ensure that hoses are securely attached.
- Keep hoses and power cord out of forklift traffic areas.
- Check hoses and cables for nicks and gouge.

ELECTROSTATIC DISCHARGE

- Static discharge may ignite flammables.
- Electrostatic discharge can be hazardous to the operator and the equipment.
- The static charge of CO_2 varies with the amount of dry ice and humidity present.

Ground the Material Being Cleaned

Always ground the material being cleaned to assure safe operation while blasting.

1. Know your environment.

- Electrostatic buildup changes as humidity levels change and will vary by location. Electrostatic discharge is higher at low humidity levels and occurs most often during winter.

2. Attach static bond cable.

- To minimize electrostatic buildup between the part being cleaned and the applicator, attach the static bond cable between the target surface and the blast hose connection or to an electrically conductive supporting structure. Use a conductivity tester for confirmation.

3. Plug into a grounded power outlet.

- This step is critical for electrostatic dissipation. If the ground is not connected, a charge may build up on the unit or the applicator.

CO_2 SAFETY

- The Aero 40FP uses solid state carbon dioxide (CO_2). CO_2 is nontoxic, noncorrosive and non-conductive. It is approved by the FDA and USDA.
- Solid CO_2 is extremely cold (-109 °F/-78 °C). Always protect skin from direct contact with CO_2 pellets. Direct contact with skin or eyes quickly causes tissue damage.
- Vapor CO_2 can displace the oxygen from any breathing environment rapidly.
- Only operate the 40FP with a proper ventilation system that maintains the concentration levels of the governing codes of your local/national body.
- Always review and observe all safety guidelines when using materials that displace oxygen.
- All operators and supervisors should familiarize themselves with the literature on the physiological characteristics of CO_2 before using the 40FP. The information can be obtained from the governing codes of your local/national body.
- Always use a CO_2 monitoring device when using the 40FP in a confined space.

Aero **40FP**

COMPONENT GUIDE

The 40FP guarantees the best pellet integrity, maximum cleaning aggression, and the most reliable blast stream on the market. In addition to the standard Aero features, the 40FP uses multiple agitation devices to eliminate clogging—allowing you to blast through the 40lb hopper without stopping.

IN THIS SECTION

SPECIFICATIONS

Weight (empty)	257lb (117kg)
Dimensions	36 x 20 x 40in (91 x 51 x 102cm)
Dry Ice Capacity	40 lb (18.2 kg)
Variable Feed Rate	0 - 4.5 lbs/min (0 - 2 kg/min)
Power Requirements	100 - 140 volts AC 1 Phase (50/60 Hz) 2.5 amps 200 - 240 volts AC 1 Phase (50/60 Hz) 1.2 amps
Feeder Drive	1/4 HP, AC Motor 1, 750 RPM
Blast Pressure Range	20 - 250 psi (1.4 - 17.2 bar)
Supply Pressure Range	65 - 250 psi (4.4 - 17.2 bar)
Air Consumption Range	50-165 CFM (1.4 - 4.7 m^3/min) at 80 psi (5.5 bar)

AERO 40FP (FRONT)

1 Fill lid

2 Bleed valve

3 Air supply connection

OM.A40FP.20150701

AERO 40FP (BACK)

1 Blast pressure control

2 Nozzle hanger

3 AC power cord

4 Blast hose connection

CONTROL PANEL

1 Power switch

2 Blast / power indicator

3 Disable blast, blue light = disabled

4 Feed rate control

5 Incoming / blast air pressure

6 Hour meter

1 Machine power indicator

2 Air only - off - air & ice

3 Light switch

4 Blast lights

5 Nozzle retention collar

6 Electric cable connection

7 Blast hose connector

8 Front / rear concurrent hand trigger

9 Threaded mount & hook hanger

1 LED light switch (optional)

2 Applicator safety switch

3 Air / ice control

4 Electric cable connection

5 Nozzle retention collar

6 Blast hose connector

7 Trigger

8 LED light (optional)

OM.A40FP.20150701

Aero **40FP**

UNIT OPERATION

IN THIS SECTION

START UP

- ⚠ Read all safety instructions before operation and follow them closely (p. 2-4).
- ⚠ Always wear proper personal protective equipment including eye protection to guard against flying objects, ear protection to prevent hearing loss and gloves to protect hands from exposure to cryogenic temperatures.
- ⚠ Before loading dry ice, purge with compressed air to be sure the system is clear of excess moisture and debris.

To start the Aero 40FP:

1. Make sure the Power Switch is off and the bleed valve is closed.
2. Attach the blast hose and control cable to the machine.
3. Attach the applicator to the blast hose and control cable.
4. Attach a nozzle to the applicator.
5. Attach the whip check to the air supply hose, then attach the air supply hose to the machine. (Check the data plate for the operating pressure range.)
6. Connect the static bond cable to the connector on the hose and then to the target surface.
7. Turn air supply on and allow the air hose to pressurize.
8. Plug the power cord into an electrical outlet. If an extension cord is necessary, it must comply with the power requirements of this unit and all governing electrical codes. (Check the data plate for the operating voltage range.)
9. Turn the Control Panel Power Switch on and ensure the Disable Blast button is disengaged (blue light is off).

10. Before loading dry ice, purge the system. Open bleed valve for 30 seconds to remove accumulated moisture from the internal filtration system. Enable the applicator, place applicator in Air + Dry Ice mode, set the feed rate to maximum and blast with compressed air for 30 seconds to clear any moisture build-up in the air and feeder system.
11. Disable the applicator, open the lid, fill with dry ice and close the lid. Enable the blast applicator.
12. The unit is now ready to use. Please read the section on Blast Cleaning Technique before proceeding.

BLAST CLEANING TECHNIQUE

⚠ Read all safety instructions before operation and follow them closely.

1. Always purge the system with air upon start-up, after breaks and before loading dry ice. Following the proper start-up procedure will remove any water ice and moisture build up in the system.
2. Position the blast hose for maximum maneuverability before blasting.
3. Do not kink the blast hose or use the blast hose to pull / maneuver the machine.
4. Hold nozzles perpendicular to the surface for fastest cleaning (recommended for most applications).
5. Optimum standoff distance is 2 - 6 in (5 - 15 cm) for most nozzles.
6. Never allow foreign objects in the dry ice hopper.
7. Do not abuse the nozzles, blast hose, applicator or control cable.
8. To find the optimum feed rate, set the feeder speed to 0 and increase the rate to achieve desired results. Use the minimum amount that is effective.
9. Reduce the feed rate to avoid clogging the nozzle at pressures below 50 psi (3.4 bar).
10. Use the Blast Pressure control by operating the push / pull locking mechanism and turning the dial clockwise to increase and counter-clockwise to decrease.

RE-LOADING DRY ICE

⚠ Always wear gloves to protect hands from exposure to cryogenic temperatures.

1. Disable the applicator.
2. Place dry ice into the hopper.
3. Close the fill lid.
4. Enable the applicator mode to the air + dry ice position.
5. Squeeze the blast applicator trigger to blast.

SHUT DOWN

⚠ Always wear gloves to protect hands from exposure to cryogenic temperatures.

⚠ Always disconnect electric cables and hoses before transporting the unit.

To shut down the Aero 40FP:

1. Stop blasting and push in the Disable Blast Button on the Control Panel.
2. Remove unused ice from the hopper.
3. Pull out the Disable Blast Button on the Control Panel.
4. Flip the Air/Ice Control Switch on the Applicator to Air Only and blast for 1 minute.
5. Stop blasting and disable the Applicator Safety.
6. Turn OFF the Power Switch.
7. Turn OFF the compressed air supply.
8. Open the bleed valve to relieve all remaining pressure.
9. If open, close the fill lid.
10. When the air hose is fully depressurized, disconnect the machine.

⚠ When shutting the machine down for more than 15 minutes, always make sure the hopper is empty and blast with air only for 1 minute. Failure to do so may result in feeder and/or nozzle freeze-up.

Aero **40FP**

MAINTENANCE

SYMBOL GLOSSARY

IN THIS SECTION

The Aero 40FP uses ISO safety symbols. The symbols come in three categories:

1. A yellow warning triangle/black graphical symbol indicates what the hazard is.
2. A blue mandatory action circle/white graphical symbol indicates an action to take to avoid the hazard.
3. A red prohibited action circle-with-slash/black graphical symbol indicates an action to avoid.

	OPERATION SYMBOL On		OPERATION SYMBOL Hour Meter
	OPERATION SYMBOL Off		OPERATION SYMBOL Air Bleed
	OPERATION SYMBOL Variable Dry Ice Feed Rate		OPERATION SYMBOL Trigger Disable
	OPERATION SYMBOL Regulated Air Pressure		

OM.A40FP.20150701

SYMBOL GLOSSARY

	WARNING SYMBOL Electrical Shock		MANDATORY ACTION Consult Operators Manual
	WARNING SYMBOL General Danger		MANDATORY ACTION Disconnect Power
	WARNING SYMBOL Hand Crush		MANDATORY ACTION General Mandatory
	WARNING SYMBOL Debris		MANDATORY ACTION Lock Out in De-Energized State
	WARNING SYMBOL Static Shock		MANDATORY ACTION Maintain Safe Pressure
	WARNING SYMBOL Hand Entaglement- Chain Drive		MANDATORY ACTION Wear Ear Protection
	WARNING SYMBOL Low Temperature		MANDATORY ACTION Wear Eye Protection
	WARNING SYMBOL Blade		MANDATORY ACTION Wear Protective Gloves
	WARNING SYMBOL Explosive Release of Pressure		PROHIBITED ACTION Do Not Operate with Guard Removed
	WARNING SYMBOL Skin Puncture / Pressurized Jet		PROHIBITED ACTION No Foreign Objects

DAILY	Use the bleed valve to drain water out of the air filter before using the machine.
	While in operation, check the pressure gauge for damage.
	Inspect the air and blast hoses for damage (IE: cuts or scuff marks).
WEEKLY	Look through the hopper to check the rotor for nicks or gouges.
	Make sure the nozzle airflow exit end is not deformed or burred.
MONTHLY	Inspect the air filter by unscrewing the base a 1/4 turn clockwise.
	Inspect the hopper thumper for worn or damaged parts and also check for loose fittings.
BIANNUAL	Inspect pneumatic air lines
	Inspect the power cord for damage.
	Inspect all lights.
	Inspect the static bonding cable for damage.
	Inspect all the accessories for damage.
	Inspect all valves.
	Inspect for air leaks.

PROBLEM	CHECK THIS	SOLUTION
Machine will NOT start	Is the unit plugged in?	Plug unit in.
	Is the power switch in the ON position?	Push power switch to ON.
	It still will not start?	Call Cold Jet for support.
Machine blasts air but not pellets	Is the Air/Ice Control Switch set to Air ONLY?	Set the Air/Ice Control Switch to Air and Dry Ice.
	Is the hopper clogged?	Call Cold Jet for support.
	Is applicator Air/Ice control in position?	Call Cold Jet for support.
	Is a foreign object lodged in the feeder assembly?	Call Cold Jet for support.
Machine will NOT blast	Is the air supply connected and the air supply on?	The nozzle may be clogged. Blast with air only to unclog the nozzle.
	Is the incoming air pressure gauge showing pressure?	The nozzle may be clogged. Blast with air only to unclog the nozzle.
	Is the applicator control cable connected to the machine and the applicator?	The nozzle may be clogged. Blast with air only to unclog the nozzle.
	Is the pressure regulator open and displaying pressure?	The nozzle may be clogged. Blast with air only to unclog the nozzle.

If the problem is not resolved, please contact our Customer Support Hotline at:
+1-800-777-9101 (+1-513-576-8981)

For technical support, accessories and spare parts, contact the appropriate Cold Jet office.

North America

USA-Cold Jet,LLC (World Headquarters)	24-hour Customer Support and Technical Service Inside the US: +1 800.777.9101 Outside the US: +1 513.576.8981 FAX: + 1 513.831.3672
Canada-Cold Jet Canada	Phone: +1 800.337.9423 Ext. 501 FAX: +1 513.831.1209 After Hours Technical Support: +1 800.777.9101
Latin America-Cold Jet Latinoamérica	Phone: +52 (81) 1097.0445 After Hours Technical Support: + 1 513.576.8981

Europe

Belgium-Cold Jet Europe bvba (European Headquarters)	Phone: +32 (0) 13 53 95 47 FAX: +32 (0) 13 53 95 49 After Hours Technical Support: +1 513.576.8981
Germany-Cold Jet Deutschland GmbH	Phone: +49 (0) 6551 9606-0 FAX: +49 (0) 6551 9606-26 After Hours Technical Support: +1 513.576.8981
Spain-Cold Jet Madrid	Phone: +34 91 426 79 63 After Hours Technical Support: +1 513.576.8981

Asia

China	Phone: +86 21 5296 7161 After Hours Technical Support: +1 513.576.8981
Japan/Korea	Phone: +81 3 6869 2665 After Hours Technical Support: +1 513.576.8981

WARRANTY

Cold Jet® ("CJ") warrants its products ("Equipment") provided under this Agreement to be free from defects in materials and workmanship for a period of 12 months (90 days on used equipment), under normal use, maintenance and service as stipulated in the Operator Manual, Commissioning, and Operator Training. At the discretion of CJ, failure to complete Installation, Commissioning, and Operator Training shall result in forfeit of warranty rights. CJ warrants that the equipment will be in good working order on the Date of Shipment and will conform to CJ's official published specifications.

The warranty period is 12 months (90 days for used equipment) for CJ manufactured Equipment. Original Equipment Manufacturers' warranties provided by CJ on equipment purchased under this Agreement not manufactured by CJ will be passed through to the Buyer. The warranty period commences on the Date of Shipment of the Equipment.

CJ's liability is limited to repairing or replacing, at its option, any covered part of its Equipment, which CJ has determined to be defective. Said repair or replacement will be made by CJ or its authorized representative free of charge to the Buyer during the warranty period. Any replaced part will become the property of CJ. If, after repeated efforts, CJ is unable to restore its Equipment to good working order, or to replace the defective parts all as warranted, CJ may replace the Equipment in its entirety at its discretion. Any claim must be made in writing to CJ within 30 days after the defect is discovered and any claim not made within that period shall be deemed waived or released and denied.

Warranty service provided under this Agreement does not assume uninterrupted operation of the Equipment. The suitability of the equipment for the purpose intended is not included in the warranty.

This warranty shall not apply and CJ shall be neither responsible nor liable for:

A) Consequential, collateral or special losses or damages;

B) Equipment conditions caused by abnormal conditions of use, accident, neglect or misuse of Equipment, improper storage or damages resulting during shipment as determined by CJ;

C) The replacement of normal wear items, including but not limited to air, blast and whip end hoses;

D) Deviation from the Equipment's prescribed maintenance programs, replacement parts, operating instructions, specifications or other terms of sale;

E) Labor charges, loss or damage resulting from improper operation, maintenance or repairs made by person(s) other than CJ or CJ-authorized service representatives;

F) Improper application of the product.

In no event shall CJ be liable for claims, whether arising from breach of contract or warranty claims of negligence or negligent manufacture, in excess of the purchase price.

THIS WARRANTY IS THE SOLE WARRANTY OF CJ AND ANY OTHER WARRANTIES, EXPRESS, IMPLIED IN LAW OR IMPLIED BY FACT, INCLUDING ANY WARRANTIES OF MERCHANTABILITY AND FITNESS FOR PARTICULAR USE, ARE HEREBY SPECIFICALLY EXCLUDED.

Aero **40FP**

APPENDIX

IN THIS SECTION

PLANT AIR (CENTRAL COMPRESSED AIR SYSTEM)

Manufacturing plants with central compressed air systems should have an after cooler and a 2-stage coalescing filter assembly downstream of the receiver tank. Hot metal pipes are an indication this is needed. To verify that the plant air system is adequate for the Aero 40FP, the air compressor needs to produce an air volume 10% greater than the Aero 40FP maximum air volume in addition to the air volume consumed by normal plant operation. To determine adequate air volume, watch the pressure gauge while blasting.

- If the gauge drops slowly, the compressor is insufficient.
- If the gauge drops quickly, there is a restriction or the pipe is too small.
- If the gauge stays steady, then the compressor and piping are adequate.

To maintain adequate pressure to the Aero 40FP:

- For distances less than 100 ft (30 m) between the air compressor and the Aero 40FP, Cold Jet recommends a flexible 1 in (25 mm) air hose, preferably the hose supplied with the Aero 40FP.
- For distances greater than 100 ft (30 m) between the air compressor and the Aero 40FP, Cold Jet recommends a larger hose/pipe to maintain adequate blast pressure.

⚠ If an air drop is seldom used or is being used with the Aero 40FP for the first time, water and rust may have collected in the line. Before connecting to the air supply, purge the line to prevent contamination of the Aero 40FP.

PORTABLE AIR

Portable air compressors are mainly used for shop tools, not dry ice blasting units; therefore, they may not be equipped to cool or remove air moisture.

⚠ An after cooler and moisture trap/filter MUST be used. An after cooler with a 15 °F (-9 °C) approach is required to reduce the discharge air temperature 180 °F (82 °C) to within 15 °F (-9°C) of ambient air temperature.

If an air cooler is not used:
- Incoming air moisture will rapidly cool and freeze at the Aero 40FP feeder.
- Ice will accumulate in the feeder, distorting the air flow and seal.
- Ice will break off inside the hose and lodge in the nozzle, causing a jam.
- Ice may exit the nozzle and damage the target surface.

If blasting continuously, use an air dryer to further reduce the air moisture (dew point). Desiccant dryers produce a dew point of -40 °F (-40 °C), resulting in a dew point low enough for continuous blasting.

To verify the compressor is of adequate size for the Aero 40FP, the air compressor needs to produce an air volume 10% greater than the Aero 40FP's maximum permissible air volume. To determine adequate air volume, watch the pressure gauge while blasting.

- If the gauge drops slowly, the compressor is insufficient.
- If the gauge drops quickly, there is a restriction or the pipe is too small.
- If the gauge stays steady, then the compressor and piping are adequate.

To maintain adequate pressure, the hose size from the compressor to the Aero 40FP needs to be a minimum 1 in (25 mm) in diameter for lengths up to 100 ft (30 m). Longer runs may require larger hose sizes.

APPENDIX B: RESIDUAL RISKS

When safety instructions are followed, most of the risks associated with the Aero 40FP are mitigated. However, the operator should be aware that a few residual risks remain.

1. Carbon Dioxide

CO_2 is an asphyxiant gas, which displaces the oxygen in the air. When the carbon dioxide levels are not monitored, there is a risk of exposure to high concentrations of CO_2. Exposure to high concentrations of carbon dioxide can result in shortness of breath, headaches, dizziness, increased heart rate, impaired hearing, nausea, loss of consciousness or, in extreme cases, death. Always use a CO_2 monitoring device when using the Aero 40FP in a confined space.

Solid CO_2 is extremely cold (-109 °F/-78 °C). This presents a risk to the operator, as direct contact with skin or eyes quickly causes tissue damage. Always protect skin from direct contact with CO_2 pellets, nuggets or slices.

2. Noise Emissions

When the proper safety precautions are not followed, prolonged exposure to the noise emitted by the Aero 40FP can cause damage. Long-term exposure to loud noises can result in loss of hearing or tinnitus. Always wear ear protection.

3. Pressurized Air

Operating the Aero 40FP requires the use of pressurized air, resulting in the risk of hoses bursting or fittings failing. Always be alert when operating the machinery. If a failure does occur, be sure to turn off the air at the source.

Never hold the air stream directly against skin. This could result in an air embolism, which is often fatal.

4. Static Electricity

⚠ Static electricity can interfere with the proper functioning of a pacemaker.

Even when grounding or bonding procedures are followed, static electricity can present a danger to the operator. To reduce this risk, always follow grounding or bonding instructions.

APPENDIX C: SCHEMATICS

IN THIS SECTION

SCHEMATIC

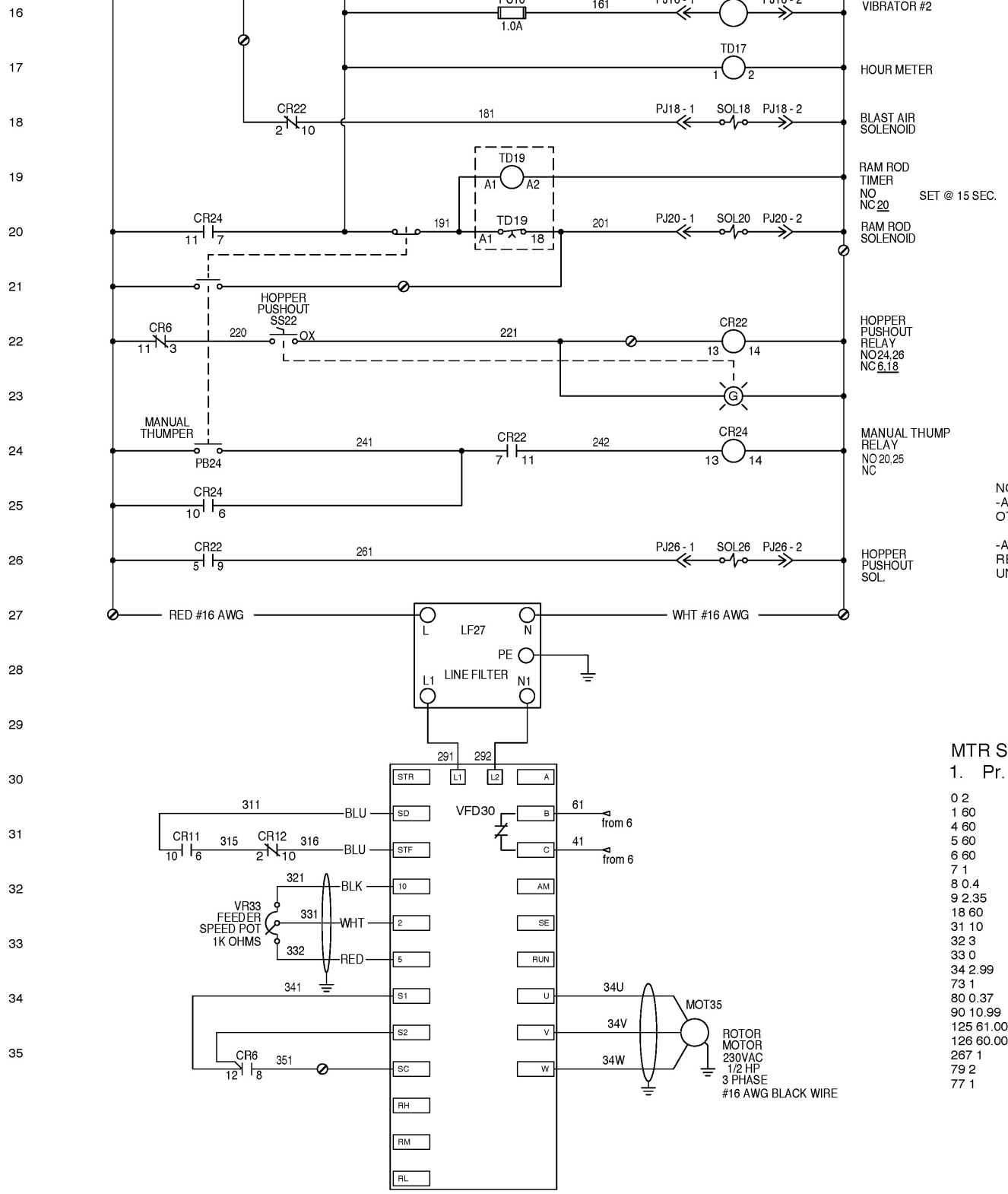

NOTE:
-ALL WIRES ARE 18AWG UNLESS OTHERWISE SPECIFIED.

-ALL WIRE COLOR IS RED & WHITE RESPECTIVE TO POWER AND COMMON UNLESS OTHERWISE SPECIFIED.

MTR SETTINGS

1. Pr. Settings

0 2
1 60
4 60
5 60
6 60
7 1
8 0.4
9 2.35
18 60
31 10
32 3
33 0
34 2.99
73 1
80 0.37
90 10.99
125 61.00
126 60.00
267 1
79 2
77 1

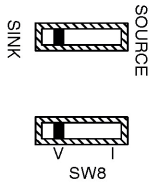

REVISION HISTORY

REV	DESCRIPTION	DATE

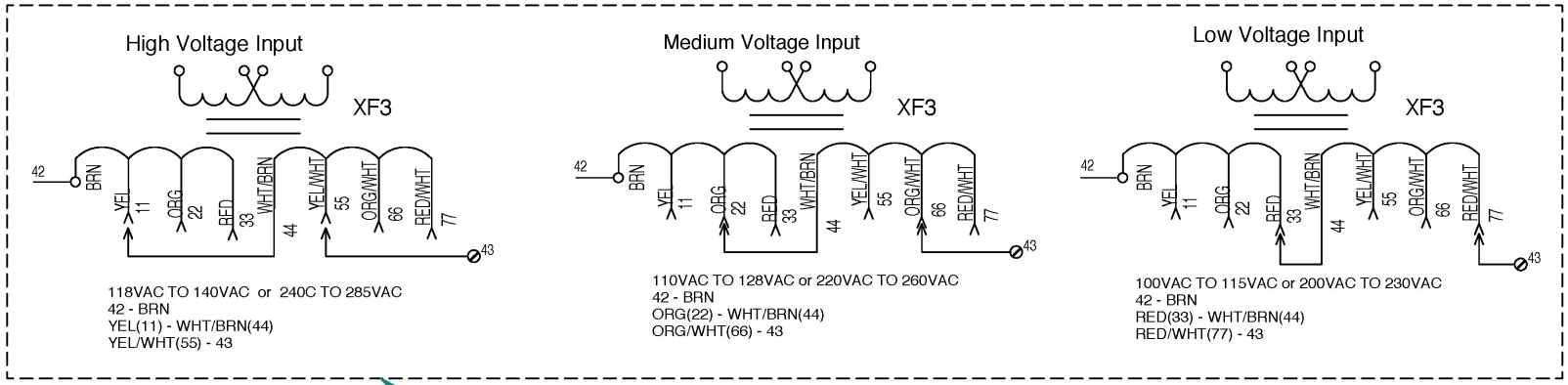

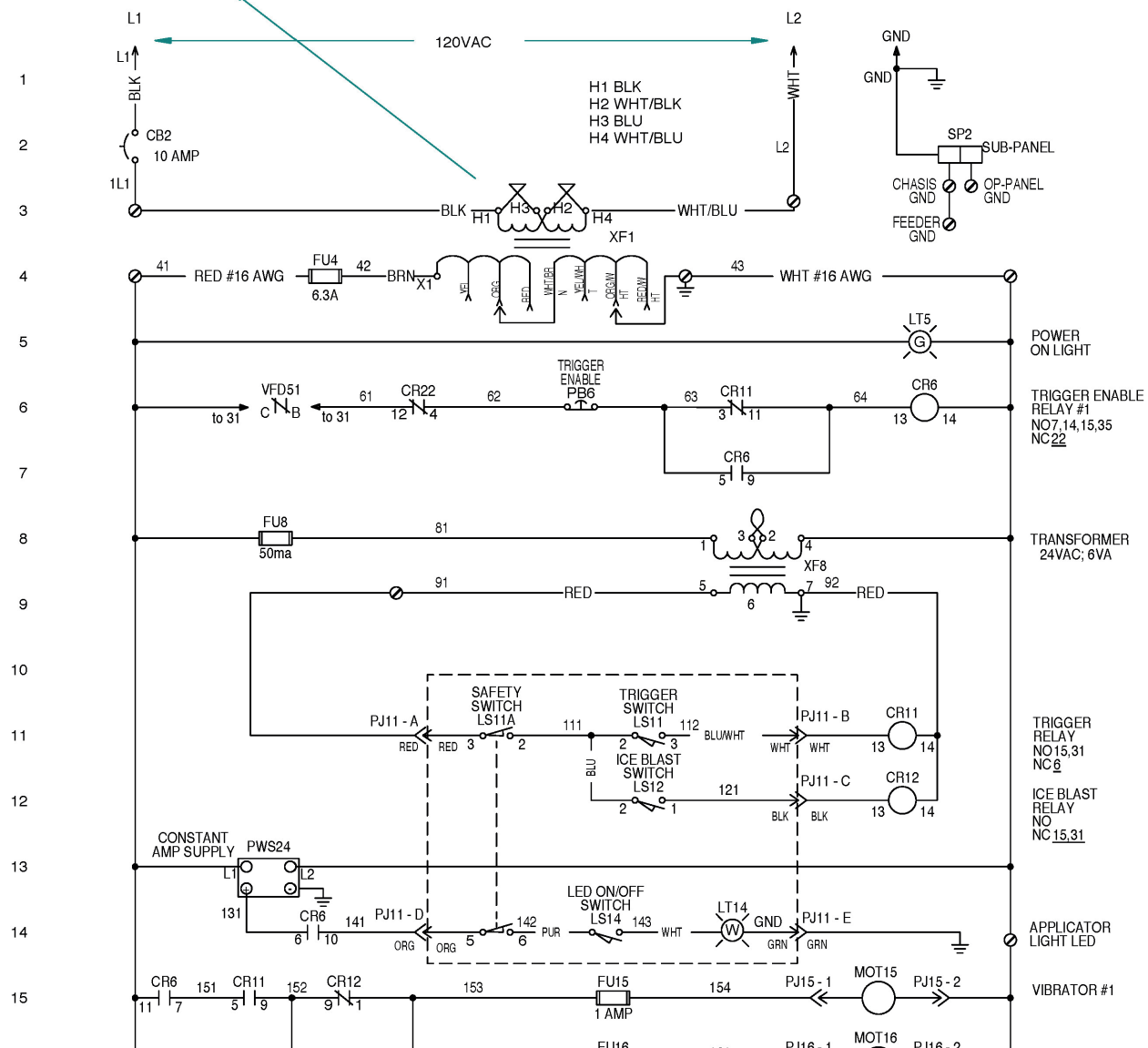

Cold Jet.

TYPE: D ASSEMBLY

TITLE: SCHEMATIC AND BOM, ELECTRICAL, 120VAC, AERO 80 FP

MATERIAL: | STOCK SIZE: - | PROJECT: PD00258

DERIVED FROM: 6G0159 | DATE: - | RELEASE DATE: - | SHEET 1 OF 3

CHANGED BY: - | DATE: - | PART NUMBER: - | REVISION:

CREATED BY: mbishop | DATE: 05\19\2015 | 6G0312

UNLESS OTHERWISE SPECIFIED
X/X ± 1/64
.X ± .1
.XX ± .01
.XXX ± .005
.XXXX ± .0005
ANGLES ± 5
SURFACES 125

THE DESIGN CONTAINED IN THIS DRAWING WAS ORIGINATED BY, AND IS THE EXCLUSIVE PROPERTY OF COLD JET, LLC. IT IS NOT TO BE USED IN ANY WAY DETRIMENTAL TO THE INTERESTS OF COLD JET, LLC.

MANUFACTURABILITY REVIEW | DATE:

FIRST ARTICLE INSPECTION | DATE:

FUNCTIONAL VERIFICATION | DATE:

VANTAGE ENTRY | DATE:

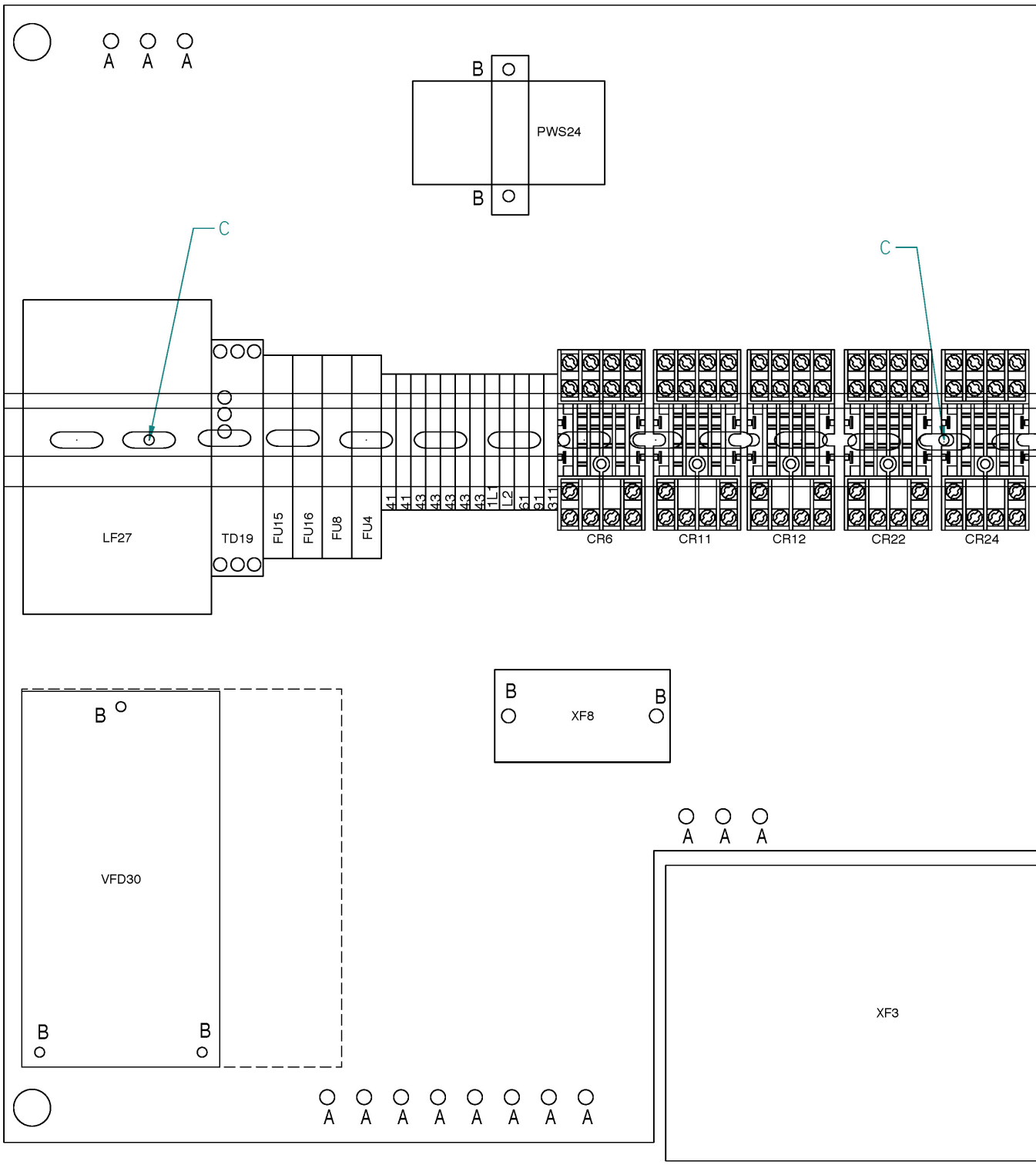

PANEL LAYOUT

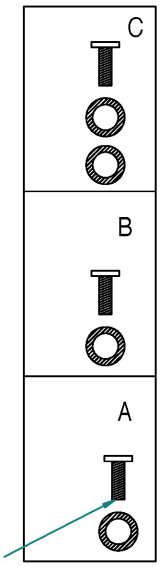

NOTE - RING LUG GOES BETWEEN SCREW AND WASHER

UNLESS OTHERWISE SPECIFIED
X/X ± 1/64
.X ± .1
.XX ± .01
.XXX ± .005
.XXXX ± .0005
ANGLES ± .5°
SURFACES 125

THE DESIGN CONTAINED IN THIS DRAWING WAS ORIGINATED BY, AND IS THE EXCLUSIVE PROPERTY OF COLD JET, LLC. IT IS NOT TO BE USED IN ANY WAY DETRIMENTAL TO THE INTERESTS OF COLD JET, LLC.

MANUFACTURABILITY REVIEW:	DATE:
FIRST ARTICLE INSPECTION:	DATE:
FUNCTIONAL VERIFICATION:	DATE:
VANTAGE ENTRY:	DATE:

Cold Jet.

D

TYPE: ASSEMBLY

TITLE: SCHEMATIC AND BOM, ELECTRICAL, 120VAC, AERO 80 FP

MATERIAL:		STOCK SIZE: –	PROJECT: PD00258
DERIVED FROM: 6G0159	DATE: –	RELEASE DATE: –	SHEET 2 OF 3
CHANGED BY: –	DATE: –	PART NUMBER: 6G0312	REVISION:
CREATED BY: mbishop	DATE: 05\19\2015		

ITEM	USER1	TAGS	QTY	SUB	DESC	MISC1
1	3G0056-A		2		WIRED CONNECTOR	
2	3G0149		1		ELECTRICAL ENCLOSURE	BLACK
3	3G0207		1		ELECTRICAL SUBPLATE	
4	3P0480-A		1		ELECTRIC CONTROL PLATE	
5	4G0366		1		ELECTRICAL CAP	
6	4G1007		4		GRIP	CORD PG11
7	4G1008		4		LOCKNUT	PG11
8	4G1009		1		GRIP	PG16
9	4G1010		1		LOCKNUT	PG16
10	4G1233		2		LOCKNUT	PLASTIC PG13.5
11	4G1793		1		CORD GRIP	
12	4G1794		1		LOCKNUT	
13	3G0085-A		1		APPLICATOR CABLE	
14	4H0314		1		TRANSFORMER	1KVA 120/230 VAC
15	4Z0045		46 IN		WEATHERSTRIP INSULATION	
16	4G0760		180 IN		CABLE	16/3 TYPE SO
17	4H0167		1		PLUG	NEMA 5-15 SPLASH PROOF
18	4P0021		3		LABEL	PROTECTIVE EARTH GROUND
19	4P0023A		1		LABEL	EARTH GROUND GRAPHIC
20	3P0448-B		1		LABEL	110 VAC
21	3P0445-A		1		LABEL	STATIC GROUND
22	3P0487		1		LABEL	AERO 80 HP
23	4Z0531		6		RIVET, POP	1/8 IN DIAMETER
24	4Z0633		52.5 IN		WEATHERSTRIP INSULATION	
25	4G1307		2		CONNECTOR	18-22 AWG
26	13464		4		FULL INS CONNECTOR	
27	4G1358		1		CONNECTOR INSULATION DISPLACEMENT	
28	4G1361		1		CONNECTOR INSULATION DISPLACEMENT	
30	FNR-C		5		LUG	#6 STUD 22-18 AWG
31	RNR-E		7		LUG	#10 STUD 18-20 AWG
32	RNB-C		2		LUG	#6 STUD 14-16 AWG
33	RNB-E		5		LUG	#10 STUD 14-16 AWG
34	13488		10		CONNECTOR	#18 AWG, RED
35	4I0152-A		3		CABLE	6' DIN "I"
36	4G1501		48 IN		CABLE	16/4 WITH SHIELD
37	4G0084-R		100 IN		WIRE	
38	4G0423-R		100 IN		WIRE	
39	4G0084-W		50 IN		WIRE	
40	4G0423-W		50 IN		WIRE	
41	4G0084-BL		120 IN		WIRE	
42	4G0081		10 IN		CABLE	3 COND.
43	4G0423-Y/G		50 IN		WIRE	
44	4G0423-B		50 IN		WIRE	
45	4G0058		14		TERMINAL BLOCK	#22-@10 AWG
46	4G0059		2		TERMINAL BARRIER	
47	4G0063		1		TERMINAL END STOP	
48	4G0645		1		CLAMPS, CABLES	
49	4G0068		14.5 IN		DIN TRACK	
50	4G1529		2		RELAY CONTROL	24VAC, 4-POLE
51	4G1039-A		1		TRANSFORMER	6VA 230/115VAC
52	4G1041		1		FUSE	5OMA
53	4G1108		1		RECYCLING TIMER	20-240 V
54	4G1218		4		FUSED TERMINAL BLOCK	W/ BLOWN
55	4G1224		1		FUSE	250 VAC 6.3A
56	4G1480		1		VFD CONTROLLER	230VAC 1 HP

BILL OF MATERI

57	4G1490		3		RELAY	240V
58	4H0200-A		1		FILTER	10AMP TRANSIANT
59	4G1819		1		LED POWER SOURCE	
60	3G0183		1		POWER SUPPLY BRACKET	
61	4G1151		2		FUSE	1A 5MM X 20MM
62	4G1037		6		RELAY SOCKET	
63	4G1038		10		RELAY CLIP	
64	4G1155		1		1 n.o. CONTACT	
65	4G1262		1		BASE, 2 n.o. CONTACTS	
66	4G0750		1		KNOB	BLACK
67	4G1255		1		PILOT LIGHT	22.5 MM - GREEN
68	4G1256		1		PILOT LIGHT BASE	
69	4G1042		1		CIRCUIT SWITCH	
70	4G1206		2		BASE LIGHT MODULE	220VAC LED
71	4G1187		1		HOUR METER	240VAC
72	4G1031		1		POTENTIOMETER	10K OHMS
73	4G1044		1		CIRCUIT COVER	
74	4G1502		1		PUSHBUTTON	PULL TO RELEASE
75	4G1155		2		BASE	SW 1NC CONTACTS 22.5MM
76	4G0366		1		ELECTRICAL CAP	
77	4G1161		1		SELECTOR SWITCH	2 POS., GREEN
78	4G1487		1		PUSHBUTTON	YELLOW, MONENTARY
79	WF-M4		1		WASHER, FLAT	M4
80	WI-E		8		WASHER, LOCK	
81	WL-M4		9		WASHER, LOCK	M4
82	WO-M4		9		WASHER, OVRSIZD, FLAT	M4
83	NL-M4		9		NUT, NYLON	M4
84	PP-M4-010		16		SCREW	PHILLIPS PAN HEAD
85	PP-M4-012		2		SCREW	PHILLIPS PAN HEAD
86	NL-06C		4		NUT, NYLON, 3/8"	
87	WI-06		1		WASHER, LOCK, 3/8"	INTERNAL TOOTH
88	WF-06		4		WASHER, FLAT, 3/8"	
89	WL-08		1		WASHER, LOCK	1/2 IN
90	HH-O8C-016		1		SCREW, 1/2 - 13 X 1"	HEX HEAD CAP
91	PP-M3-005		2		SCREW	PHILLIPS PAN HEAD
92	4Z0417-A		4		SCREW	PHILLIPS PAN HEAD
93	4G0743		7		SCREW	10-32 x3/8
94	WL-M3		2		WASHER, LOCK	
95	4G2017		2		CONNECTOR 600V YELLOW	
96	4G2018		2		CONNECTOR 600V ORANGE	
97	4G2019		2		CONNECTOR 600V RED	
98	4G2020		2		CONNECTOR 600V BROWN	
99	4G2021		6		CONNECTOR 600V WHITE	
100	4G2022		10		CONNECTOR 15AMP CONTACTS	
101	4G1262		1		BASE W/ 2 N.O. CONTACTS	

UNLESS OTHERWISE SPECIFIED
X/X ± 1/64
.X ± .1
.XX ± .01
.XXX ± .005
.XXXX ± .0005
ANGLES ± .5°
SURFACES 125

MANUFACTURABLITY REVIEW	DATE:
FIRST ARTICLE INSPECTION	DATE:
FUNCTIONAL VERIFICATION	DATE:
VANTAGE ENTRY	DATE:

Cold Jet.

D

TYPE: ASSEMBLY

TITLE: SCHEMATIC AND BOM, ELECTRICAL, 120VAC, AERO 80 FP

MATERIAL:		STOCK SIZE: –	PROJECT: PD00258
DERIVED FROM: 6G0159	DATE: –	RELEASE DATE: –	SHEET 3 OF 3
CHANGED BY: –	DATE: –	PART NUMBER: 6G0312	REVISION:
CREATED BY: mbishop	DATE: 05\19\2015		

AL

SCHEMATIC

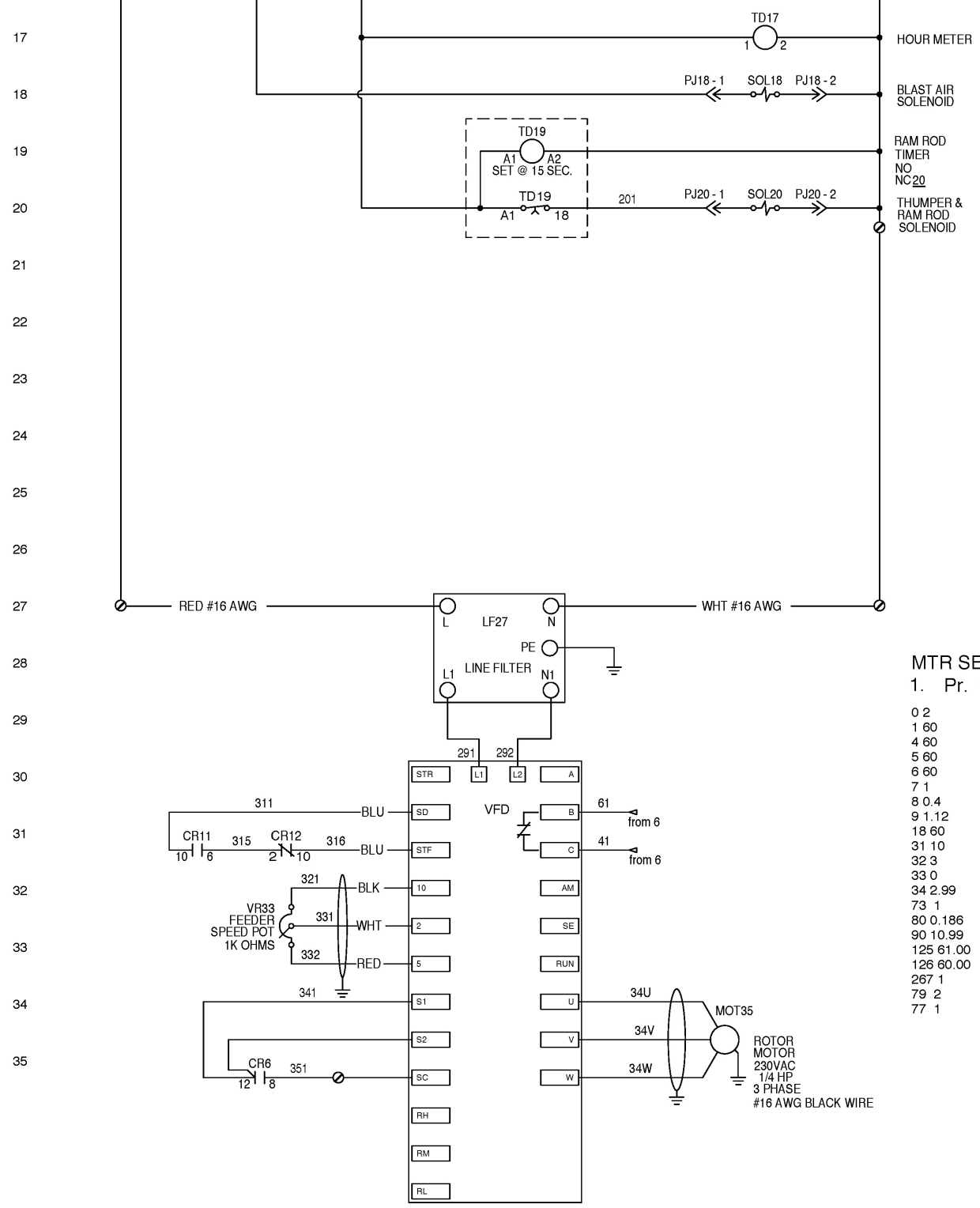

TD19 SETTING
0.1-1
1.5

6-60
1

NOTE:
-ALL WIRES ARE 18AWG UNLESS OTHERWISE SPECIFIED.

-ALL WIRE COLOR IS RED & WHITE RESPECTIVE TO POWER AND COMMON UNLESS OTHERWISE SPECIFIED.

-USING A BOND CABLE, BOND THE OPERATOR PANEL TO A GROUND.

MTR SETTINGS

1. Pr. Settings

0 2
1 60
4 60
5 60
6 60
7 1
8 0.4
9 1.12
18 60
31 10
32 3
33 0
34 2.99
73 1
80 0.186
90 10.99
125 61.00
126 60.00
267 1
79 2
77 1

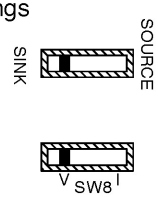

REVISION HISTORY

REV	DESCRIPTION	DATE

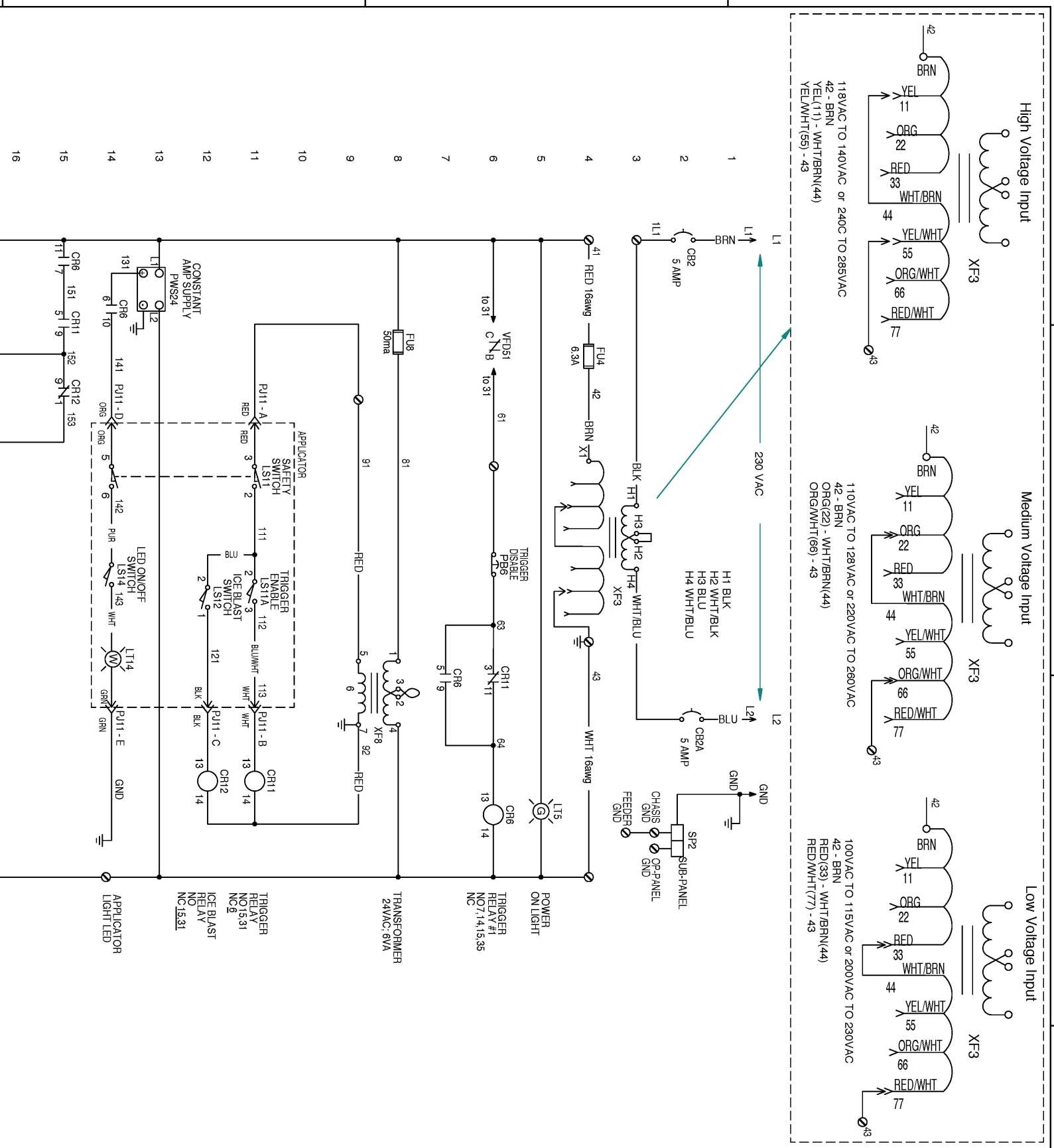

UNLESS OTHERWISE SPECIFIED
X/X ± 1/64
.X ± .1
.XX ± .01
.XXX ± .005
.XXXX ± .0005
ANGLES ± .5°
SURFACES 125

Cold Jet.

MANUFACTURABILITY REVIEW:	DATE:	TYPE: ASSEMBLY	
FIRST ARTICLE INSPECTION:	DATE:	TITLE: SCHEMATIC AND BOM, ELECTRICAL, 230VAC, AERO 40 FP	
FUNCTIONAL VERIFICATION:	DATE:	MATERIAL: – / DATE: –	STOCK SIZE: – / PROJECT: PD00257
VANTAGE ENTRY:	DATE:	DERIVED FROM: 6G0156 / DATE: –	RELEASE DATE: – / SHEET 1 OF 3
		CHANGED BY: – / DATE: –	PART NUMBER: 6G0311 / REVISION:
		CREATED BY: mbishop / DATE: 05\19\2015	

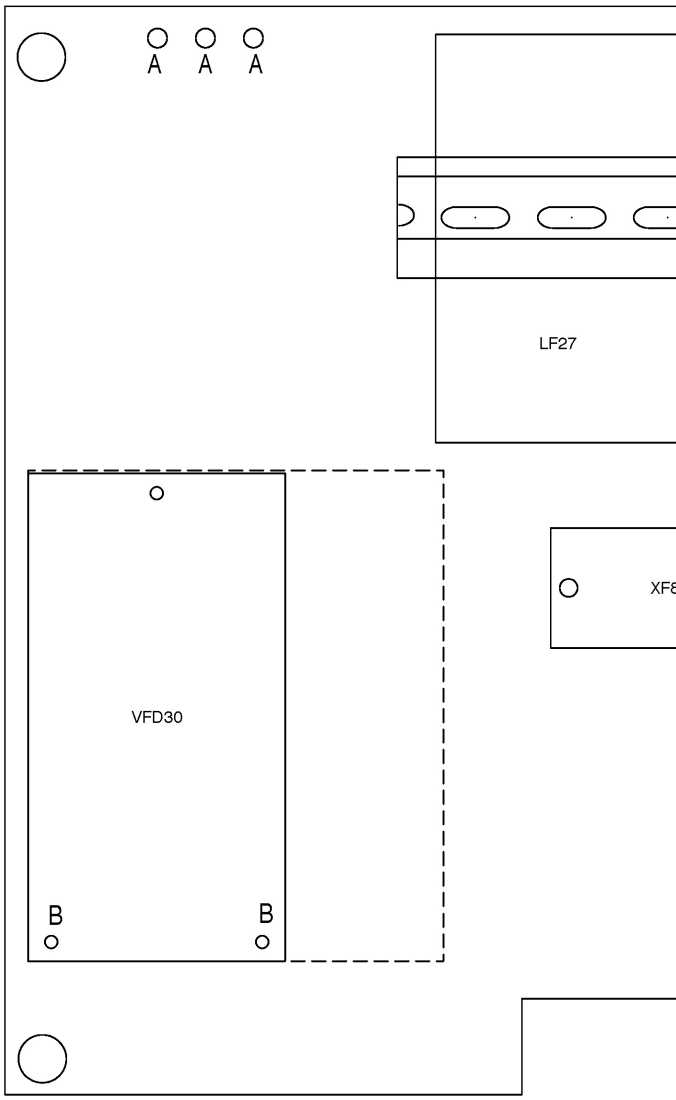

PANEL LAYOUT

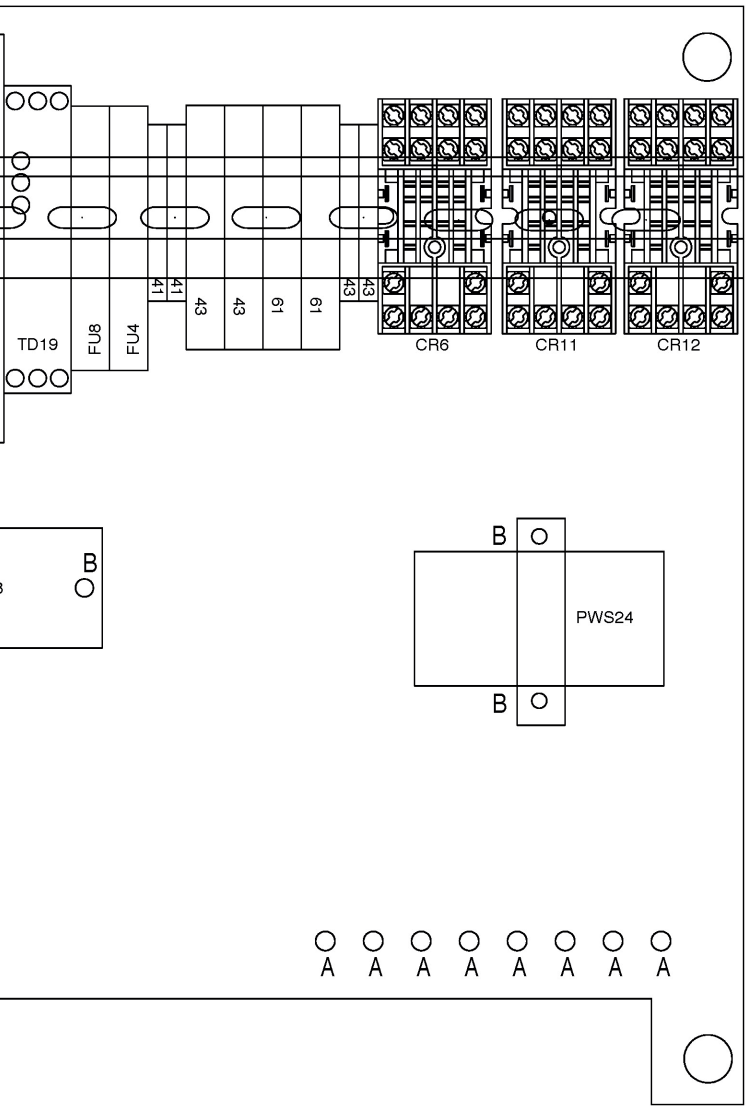

UNLESS OTHERWISE SPECIFIED
X/X ± 1/64
.X ± .1
.XX ± .01
.XXX ± .005
.XXXX ± .0005
ANGLES ± .5°
SURFACES 125

MANUFACTURABILITY REVIEW:	DATE:
FIRST ARTICLE INSPECTION:	DATE:
FUNCTIONAL VERIFICATION:	DATE:
VANTAGE ENTRY:	DATE:

Cold Jet.

D

TYPE: ASSEMBLY

TITLE: SCHEMATIC AND BOM, ELECTRICAL, 230VAC, AERO 40 FP

MATERIAL:		STOCK SIZE: –	PROJECT: PD00257
DERIVED FROM: 6G0156	DATE: –	RELEASE DATE: –	SHEET 2 OF 3
CHANGED BY: –	DATE: –	PART NUMBER: 6G0311	REVISION:
CREATED BY: mbishop	DATE: 05\19\2015		

ITEM	USER1	TAGS	QTY	SUB	DESC	MISC1
1	3G0085-A		1		CABLE	MOLDED PANEL
2	4G1501		48 IN		CABLE	16/4 W/ SHIELD
3	4H0150		180 IN		CABLE	16/3 TYPE OS
4	4H0149		1		NEMA PLUG	PLUG CEE7/7 1
5	4G1358		1		INSULATION DISPLACEMENT CONN.	
6	13464		2		FULL INS CONNECTOR	
7	3P0493-A		1		CONTROL PLATE	
8	4G0750		1		KNOB	BLACK
9	4G1031		1		POTENTIOMETER	10K OHMS
10	4G1043		1		CIRCUIT SWITCH	5 AMPS
11	4G1044		1		CIRCUIT COVER	
12	4G1155		1		BASE	SW 1NC CONTA
13	4G1187		1		HOUR METER	240VAC
14	4G1206		1		BASE LIGHT MODULE	220VAC LED
15	4G1255		1		PILOT HEAD LIGHT	22.5 mm
16	4G1256		1		PILOT LIGHT BASE	
17	4G1307		2		CONNECTOR	18-22 AWG
18	4G1502		1		PUSHBUTTON	
19	4G0366		1		CAP HOLE PLUG	
20	4G1793		1		CORD GRIP	
21	4G1794		1		LOCKNUT	
22	4G1007		3		GRIP	CORD PG11
23	4G1008		3		LOCKNUT	PG11
24	4G1009		1		GRIP	CORD PG16
25	4G1010		1		LOCKNUT	PG16
26	4I0152-A		2		CABLE	6' DIN "I"
27	4P0021		1		LABEL	PROTECTIVE G
28	4P0023A		1		LABEL	EARTH GROUN
29	3P0483-A		1		LABEL	AERO 40
30	3P0449-B		1		LABEL	230 VAC
31	3P0445-A		1		LABEL	STATIC GROUN
32	3G0150-A		1		ELECTRICAL ENCLOSURE	
33	4Z0045		38 IN		WEATHERSTRIP INSULATION	
34	FNB-E		1		LUGS	
35	FNR-E		3		LUGS	
36	4G2017		2		CONNECTOR 600V YELLOW	
37	4G2018		2		CONNECTOR 600V ORANGE	
38	4G2019		2		CONNECTOR 600V RED	
39	4G2020		2		CONNECTOR 600V BROWN	
40	4G2021		6		CONNECTOR 600V WHITE	
41	4G2022		10		CONNECTOR 15AMP CONTACTS	
42	4G1039-A		1		TRANSFORMER	6VA 230/115VA
43	4H0314		1		TRANSFORMER	1KVA 120/230 V
44	4G1814		1		LED POWER SOURCE	
45	3G0183		1		POWER SUPPLY BRACKET	
46	3G0208		1		SUB-PANEL	
47	4G0058		4		TERMINAL BLOCK	#22 - #10 AWG
48	4G0063		1		TERMINAL BLOCK CLAMP	GREY
49	4G0066		2		HORIZONTAL JUMPER BAR	
50	4G0068		11 IN		DIN TRACK	
51	4G0081		10 IN		CABLE	3 COND.
52	4G0084-BL		120 IN		WIRE	
53	4G0084-R		100 IN		WIRE	
54	4G0084-W		50 IN		WIRE	
55	4G0423-B		50 IN		WIRE	
56	4G0423-R		100 IN		WIRE	
57	4G0423-W		50 IN		WIRE	
58	4G0423-Y/G		50 IN		WIRE	

BILL OF MATERI

59	4G1041		1		FUSE	50 MA
60	4G1108		1		RECYCLING TIMER	
61	4G1218		2		FUSED TERMINAL BLOCK	W/ BLOWN
62	4G1224		1		FUSE	250 VAC 6.3A
63	4G1358		1		CONNECTOR INSULATION DISPLACEMENT	
64	4G1361		1		CONNECTOR INSULATION DISPLACEMENT	
65	4G1400		4		TERMINAL BLOCKS	3 AMP
66	4G1401		4		TERMINAL BLOCK JUMPER	10 POLE
67	4G1490		1		RELAY	240 V
68	4G1037		3		SOCKET RELAY	
69	4G1038		6		RELAY CLIP	
70	4G1529		2		RELAY CONTROL	24VAC 4 POLE
71	4G1588		1		VFD CONTROLLER	230 VAC 1/2HP
72	4H0200-A		1		FILTER	10 AMP TRANSIANT
73	RNR-E		4		LUG	#10, 18-20AWG RING
74	FNR-C		5		LUG	22-18 #6 STUD
75	RNB-C		1		LUG	#6, 14-16 AWG RING
76	RNB-E		5		LUG	#10, 14-16 AWG RING
77	WF-M4		1		WASHER, FLAT	M4
78	WI-E		8		WASHER, LOCK	
79	WL-M4		9		WASHER, LOCK	M4
80	WO-M4		9		WASHER, OVRSIZD, FLAT	M4
81	NL-M4		9		NUT, NYLON	M4
82	PP-M4-010		15		SCREW	PHILLIPS PAN HEAD
83	PP-M4-012		2		SCREW	PHILLIPS PAN HEAD
84	NL-06C		4		NUT, NYLON, 3/8"	
85	WI-06		1		WASHER, LOCK, 3/8"	INTERNAL TOOTH
86	WF-06		4		WASHER, FLAT, 3/8"	
87	WL-08		1		WASHER, LOCK	1/2 IN
88	HH-O8C-016		1		SCREW, 1/2 - 13 X 1"	HEX HEAD CAP
89	PP-M3-005		2		SCREW	PHILLIPS PAN HEAD
90	4Z0417-A		4		SCREW	PHILLIPS PAN HEAD
91	4G0743		7		SCREW	10-32 x3/8
92	WL-M3		2		WASHER, LOCK	

UNLESS OTHERWISE SPECIFIED
X/X ± 1/64
.X ± .1
.XX ± .01
.XXX ± .005
.XXXX ± .0005
ANGLES ± .5°
SURFACES 125

MANUFACTURABILITY REVIEW:	DATE:
FIRST ARTICLE INSPECTION:	DATE:
FUNCTIONAL VERIFICATION:	DATE:
VANTAGE ENTRY:	DATE:

Cold Jet.

D

TYPE: ASSEMBLY

TITLE: SCHEMATIC AND BOM, ELECTRICAL, 230VAC, AERO 40 FP

MATERIAL:		STOCK SIZE: -	PROJECT: PD00257
DERIVED FROM: 6G0156	DATE: -	RELEASE DATE: -	SHEET 3 OF 3
CHANGED BY: -	DATE: -	PART NUMBER: 6G0311	REVISION:
CREATED BY: mbishop	DATE: 05\19\2015		

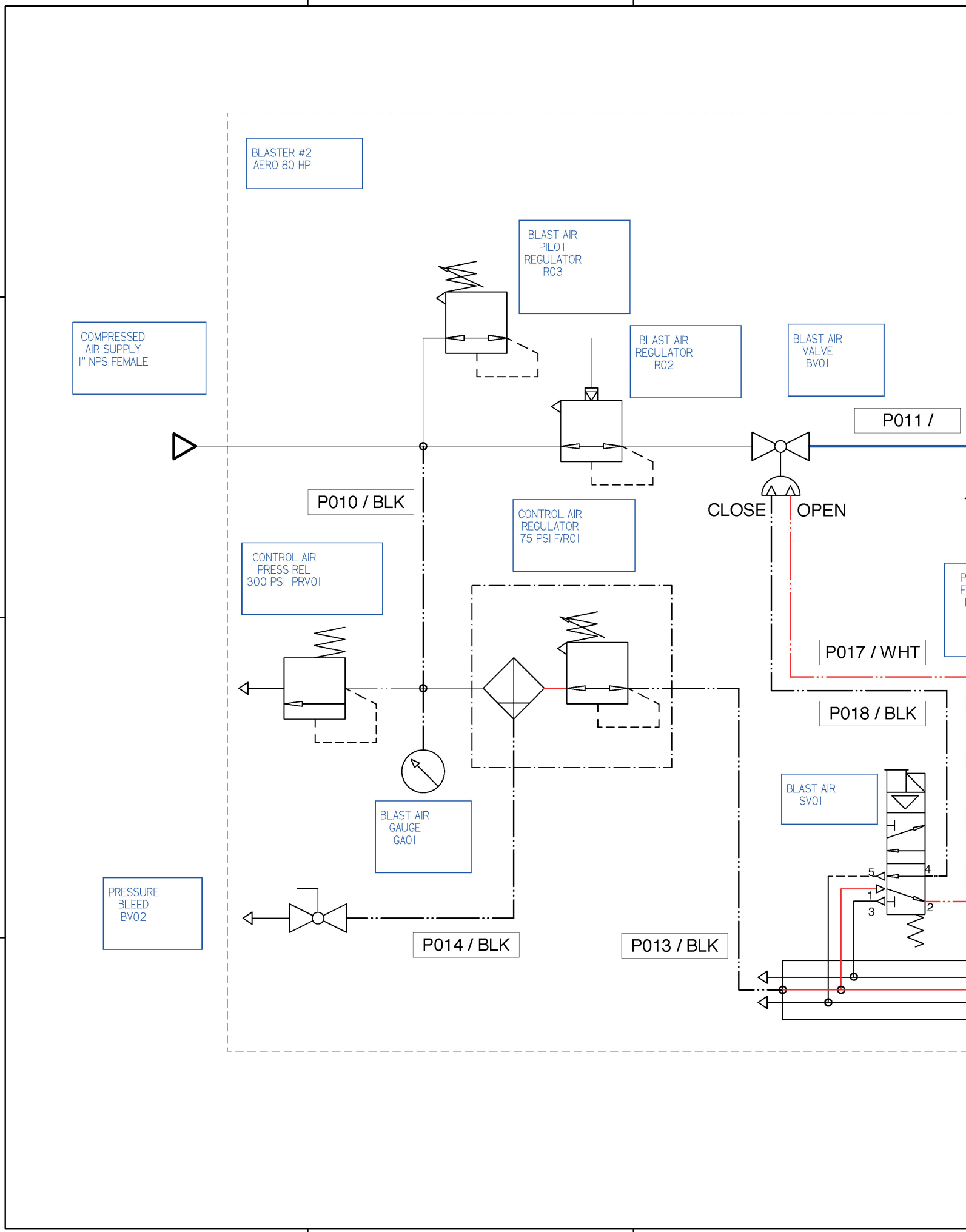
BLASTER #2
AERO 80 HP
BLAST AIR
PILOT
REGULATOR
R03
COMPRESSED
AIR SUPPLY
1" NPS FEMALE
BLAST AIR
REGULATOR
R02
BLAST AIR
VALVE
BV01
P011 /
P010 / BLK
CLOSE
OPEN
CONTROL AIR
REGULATOR
75 PSI F/R01
CONTROL AIR
PRESS REL
300 PSI PRV01
P017 / WHT
P018 / BLK
BLAST AIR
SV01
BLAST AIR
GAUGE
GA01
PRESSURE
BLEED
BV02
P014 / BLK
P013 / BLK

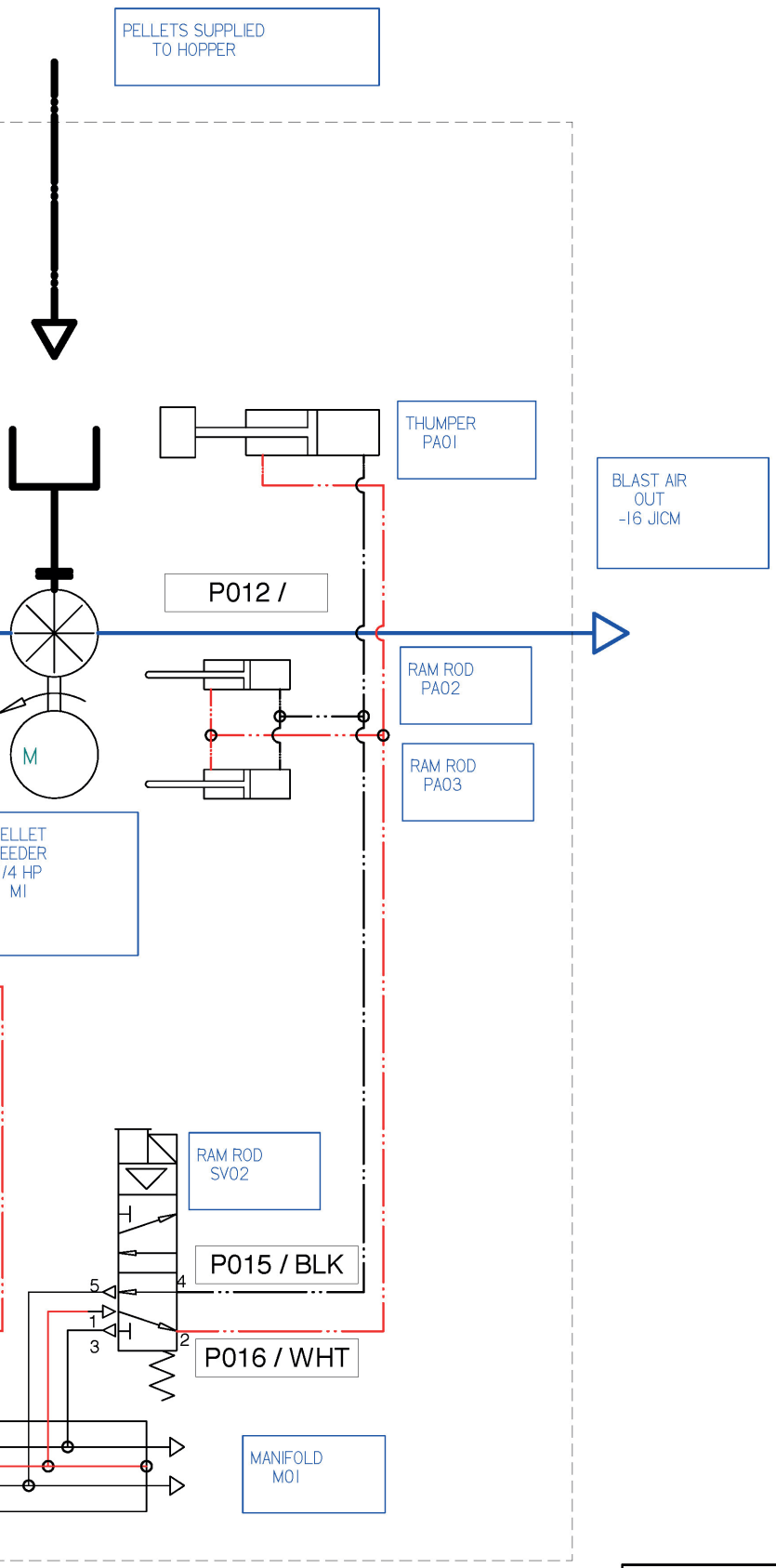

LEGEND	
LINE/ DEVICE LABEL	DEFINITION
BV	BALL VALVES
PRV	PRESS RELIEF VALVES
FC	FLOW CONTROL VALVES
PS	PRESSURE SWITCHES
TS	TEMPERATURE SWITCHES
LS	LEVEL SWITCHES
R	REGULATORS
F	FILTERS
GA	GAUGES
M	MANIFOLDS
PA	PNEUMATIC ACTUATORS
SA	SOLENOID ACTUATORS
FLT	FLOAT SWITCH
SV	SOLENOID VALVE
F/R	FILTER /REGULATOR

HOSE LEGEND	
	BLASTING PELLETS, MANUAL FEE
	-20 TUBING, 304 SST, .060" WAL
	-16 FLEXIBLE HOSE
	-
	.25" NYLON TUBING, BLACK
	.25" NYLON TUBING, WHITE
	MECHANICAL FITTINGS
	FIELD CONNECTIONS

UNLESS OTHERWISE SPECIFIED
X/X ± 1/64
.X ± .1
.XX ± .01
.XXX ± .005
.XXXX ± .0005
ANGLES ± .5°
SURFACES 125

MANUFACTURABILITY REVIEW:	DATE:	
FIRST ARTICLE INSPECTION:	DATE:	
FUNCTIONAL VERIFICATION:	DATE:	
VANTAGE ENTRY:	DATE:	

Cold Jet.

D

TYPE: ASSEMBLY

TITLE: BLAST UNIT, AERO 40FP

MATERIAL:		STOCK SIZE: -	PROJECT: PD00257
DERIVED FROM: Enter Source Part	DATE: -	RELEASE DATE: Error: No reference	SHEET 3 OF 3
CHANGED BY: -	DATE: -	PART NUMBER: 2A0290	REVISION:
CREATED BY: MRIVIR	DATE: 03\27\2015		

INDEX

OM.A40FP.20150701